Arduino ADS1115 and MCP4725

http://www.bristolwatch.com/ardunio2/

By Lewis Loflin
lewis@bvu.net

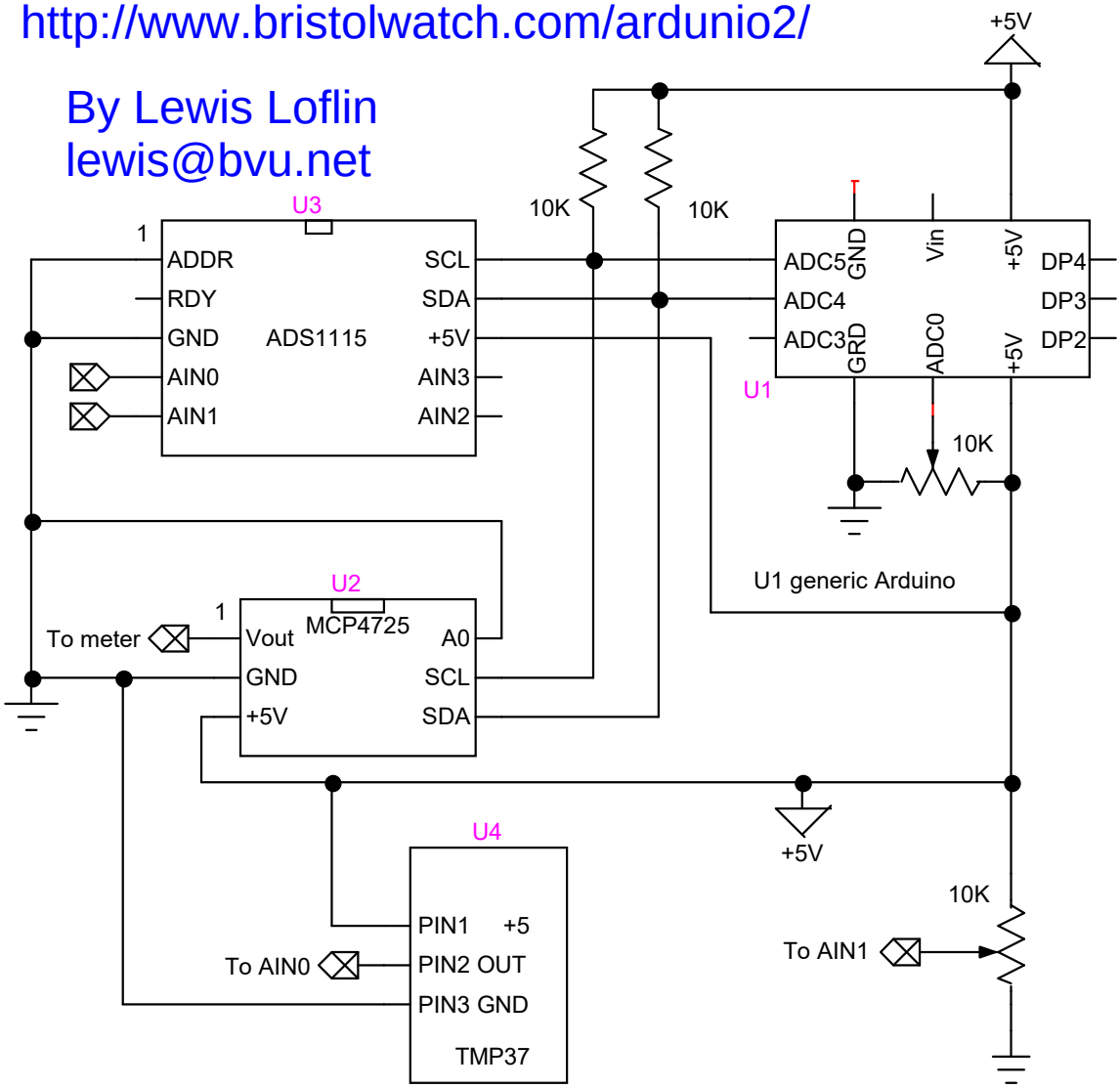

I2C LCD display not shown.